HNC324N-WDU

4MP Dual Light Fixed Wedge Dome

NDAA COMPLIANT | **FCC** CERTIFIED

- 4MP resolution (2688 × 1520)
- Dual light: IR + white light, up to 100 ft
- Smart analytics: line crossing, intrusion
- Fixed 2.8 mm lens, 95° field of view
- IP67 / IK10 rated housing

See compatible mounts on page 2

Specifications

CAMERA

Image Sensor	1/2.9-in. 4MP Progressive CMOS
Maximum Resolution	2688 × 1520
Minimum Illumination	**Color:** 0.007 Lux at F1.6 **Black/White:** 0.0007 Lux at F1.6 0 Lux With IR Light On
Number of Illuminators	Two (2) White-Light LED, Two (2) IR LED, Supports Smart Lux
Illuminator Control	Automatic, Manual
Maximum Illumination Distance	**IR:** Up to 30.5 m (100.0 ft) **White Light:** Up to 30.5 m (100.0 ft)
Electronic Shutter Speed	Automatic, Manual 1/3 s to 1/100,000 s
Installation Angle	**Pan/Rotation:** 0° to 355° **Tilt:** 0° to 80°

LENS

Iris Type	Fixed
Lens Type	Fixed
Focal Length	2.8 mm
Maximum Aperture	F1.6
Field of View	**Horizontal:** 95° **Vertical:** 52° **Diagonal:** 114°
Close Focus Range	1.1 m (3.6 ft)
DORI Distance	**Detect:** 63.4 m (208.0 ft) **Observe:** 25.2 m (82.7 ft) **Recognize:** 12.5 m (41 ft) **Identify:** 6.3 m (20.7 ft)

VIDEO

Compression	Smart Encoding H.265+, H.265, Smart Encoding H.264+, H.264, MJPEG (Sub Stream Only)
Standard Codec	Supported
Stream Capability	Two (2)
Resolution	4MP (2688 × 1520), 4MP (2560 × 1440), 3MP (2304 × 1296), 1080p (1920 × 1080), 1.3MP (1280 × 960), 720P (1280 × 720), D1 (704 × 480), VGA (640 × 480), CIF (352 × 240)
Maximum Frame Rate	**Main Stream:** 2688 × 1520 at 30 fps **Sub Stream 1:** D1 at 30 fps
Video Bit Rate	**H.264:** 32 kbps to 6,144 kbps **H.265:** 12 kbps to 6,144 kbps
Bit Rate Control	CBR/VBR
Light Balancing	Wide Dynamic Range (120 dB)
Noise Reduction	3D NR
Day/Night	Automatic (ICR), Color, Black and White
Image Angle	0°/90°/180°/270°
Mirror Rotation	Supported
Region of Interest	Four (4) Zones
Privacy Masking	Four (4) Zones

ANALYTICS

Video Content Analytics	Line Crossing, Intrusion
Smart Motion	Supported with Alarms for Vehicles and Humans

AUDIO

Compression	G.711a, G.711Mu, PCM
Interface	**Input:** Built-In Microphone and one (1) channel **Output:** one (1) channel

ALARM

Event	Line Crossing, Intrusion, Motion Detection, Smart Motion, Audio Detection, Video Tampering, Disk Full, Disk Error, Voltage Detection, Security Exception

NETWORK

Interface	RJ-45 (10/100 Base-T)
Protocol	IPv4, IPv6, DNS, TCP, UDP, DHCP, HTTP, HTTPS, 802.1X, RTSP, DDNS, P2P, SMTP, RTMP, UPnP, Auto Registration, ICMP, IGMP, FTP, SFTP, RTP, RTCP, ARP, NTP, Multicast, NFS
Interoperability	ONVIF (Profile S/G/T), CGI
Browser	Chrome, Firefox, Edge
Storage	FTP, SFTP, Micro SD Card (Max. 256 GB)

ELECTRICAL

Power Supply	12 VDC, PoE (802.3af)
Power Consumption	12 VDC **Maximum:** 7.1 W **Normal:** 2.3 W PoE **Maximum:** 8.5 W **Normal:** 2.8 W

CONSTRUCTION

Net Weight	0.4 kg (0.8 lb)
Gross Weight	0.5 kg (1.1 lb)
Operating Temperature	-40 to 60 °C (-40 to 140 °F) < 95% RH (Non-Condensing)
Storage Temperature	-40 to 60 °C (-40 to 140 °F)
Protection Ratings	IP67, IK10
Product Dimensions (L x W x H)	Φ108.9 mm x 55.0 mm (Φ4.3 in. x 2.2 in.)
Packaging Dimensions (L x W x H)	137.0 mm x 137.0 mm x 87.0 mm (5.4 in. x 5.4 in. x 3.4 in.)
Material	Metal

DIMENSIONS

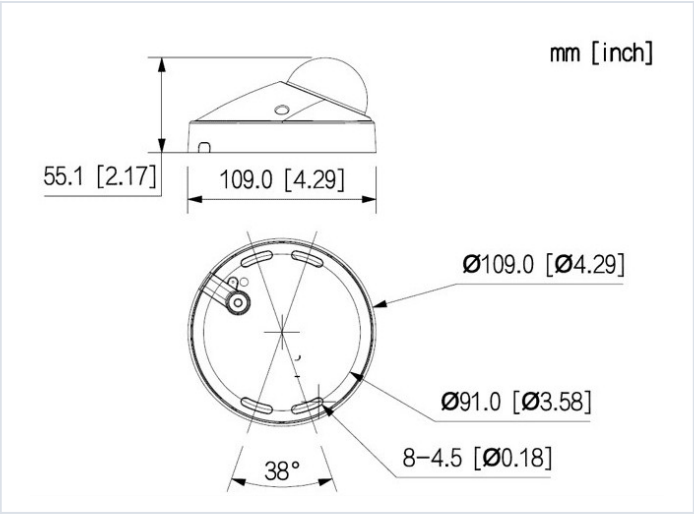

CERTIFICATIONS AND COMPLIANCE

Certifications	FCC, IC
Compliance	NDAA

Compatible Mounts

The mounts below are compatible with this camera and are sold separately. Click any SKU to see photos and details on huntcctv.com, or contact us at (888) 993-4868 or info@huntcctv.com if you are not sure which mount fits your installation.

MOUNT TYPE	SKU	DESCRIPTION
Electrical Box	HTH-285NJ-J05 ↗	Electrical Box (110mm)
Wall Mount	HTH-272NJ-110B ↗	Wall Mount Bracket (110mm)
Pendant Mount (1 ft)	HTH-271NJ-110 ↗	Pendant Mount, 1 ft (110mm)
Telescope Mount (2–4 ft)	HTH-271NJ-110-24 ↗	Telescope Mount, 2–4 ft (110mm)
Telescope Mount (3–6 ft)	HTH-271NJ-110-36 ↗	Telescope Mount, 3–6 ft (110mm)