HNC328N-XDUB/2.8

8MP Dual Light Fixed Turret, Black

NDAA COMPLIANT | **FCC** CERTIFIED

- 8MP resolution (3840 × 2160)
- Dual light: IR + white light, up to 100 ft
- Smart analytics: line crossing, intrusion
- Fixed 2.8 mm lens, 110° field of view
- IP67 rated housing

See compatible mounts on page 2

Specifications

CAMERA

Image Sensor	1/2.7-in. 8MP Progressive CMOS
Maximum Resolution	3840 × 2160
Minimum Illumination	**Color:** 0.007 Lux at F1.6 **Black/White:** 0.0007 Lux at F1.6 0 Lux With IR Light On
Number of Illuminators	One (1) White-Light LED, One (1) IR LED
Illuminator Control	Automatic, Manual
Maximum Illumination Distance	**IR:** Up to 30.5 m (100.0 ft) **White Light:** Up to 30.5 m (100.0 ft)
Electronic Shutter Speed	Automatic, Manual 1/3 s to 1/100,000 s
Installation Angle	**Pan/Rotation:** 0° to 355° **Tilt:** 0° to 78°
S/N Ratio	> 56 dB

LENS

Iris Type	Fixed
Lens Type	Fixed
Focal Length	2.8 mm
Maximum Aperture	F1.6
Field of View	**Horizontal:** 110° **Vertical:** 58° **Diagonal:** 132°
Close Focus Range	1.5 m (4.9 ft)
DORI Distance	**Detect:** 84.5 m (277.2 ft) **Observe:** 33.6 m (110.3 ft) **Recognize:** 16.6 m (54.5 ft) **Identify:** 8.3 m (27.2 ft)

VIDEO

Compression	Smart Encoding H.265+, H.265, Smart Encoding H.264+, H.264, MJPEG (Sub Stream Only)
Standard Codec	Supported
Stream Capability	Two (2)
Resolution	8MP (3840 × 2160), 6MP (3072 × 2048), 5MP (3072 × 1728), 5MP (2880 × 1620), 4MP (2688 × 1520), 3MP (2048 × 1536), 3MP (2304 × 1296), 1080P (1920 × 1080), 1.3MP (1280 × 960), 720P (1280 × 720), D1 (704 × 480), VGA (640 × 480), CIF (352 × 240)
Maximum Frame Rate	**Main Stream:** 3840 × 2160 at 20 fps **Sub Stream 1:** D1 at 30 fps
Video Bit Rate	**H.264:** 3 kbps to 8,192 kbps **H.265:** 3 kbps to 8,192 kbps
Bit Rate Control	CBR/VBR
Day/Night	Automatic (ICR), Color, Black and White
Light Balancing	Wide Dynamic Range (120 dB)
Noise Reduction	3D NR
Image Angle	0°/90°/180°/270° (90°/270° Available for 2688 × 1520 Resolution or Lower)
Mirror Rotation	Supported
Region of Interest	Four (4) Zones
Privacy Masking	Four (4) Zones

ANALYTICS

Video Content Analytics	Line Crossing, Intrusion
Smart Motion	Supported with Alarms for Vehicles and Humans

AUDIO

Compression	G.711a, G.711Mu, PCM
Interface	**Input:** Built-In Microphone

ALARM

Event	Line Crossing, Intrusion, Motion Detection, Smart Motion, Audio Detection, Video Tampering, Disk Full, Disk Error, Voltage Detection, Security Exception

NETWORK

Interface	RJ-45 (10/100 Base-T)
Protocol	IPv4, IPv6, DNS, TCP, UDP, DHCP, HTTP, HTTPS, 802.1X, RTSP, DDNS, P2P, SMTP, RTMP, UPnP, Auto Registration, ICMP, IGMP, FTP, SFTP, RTP, RTCP, ARP, NTP, Multicast, NFS
Interoperability	ONVIF (Profile S/G/T), CGI
Browser	Chrome, Firefox, Edge
Client	NeoViewer, NeoViewer App
Storage	FTP, SFTP, Micro SD Card (Max. 256 GB)

ELECTRICAL

Power Supply	12 VDC, PoE (802.3af)
Power Consumption	12 VDC **Maximum:** 6.9 W **Normal:** 2.6 W PoE **Maximum:** 8.3 W **Normal:** 3.3 W

CONSTRUCTION

Net Weight	0.5 kg (1.2 lb)
Gross Weight	0.7 kg (1.6 lb)
Operating Temperature	-40 to 60 °C (-40 to 140 °F) < 95% RH (Non-Condensing)
Storage Temperature	-40 to 60 °C (-40 to 140 °F)
Protection Ratings	IP67
Product Dimensions (L x W x H)	122.0 mm × 111.8 mm (4.8 in. × 4.4 in.)
Packaging Dimensions (L x W x H)	148.0 mm x 139.0 mm x 137.0 mm (5.3 in. x 5.5 in. x 5.4 in.)
Material	Metal

DIMENSIONS

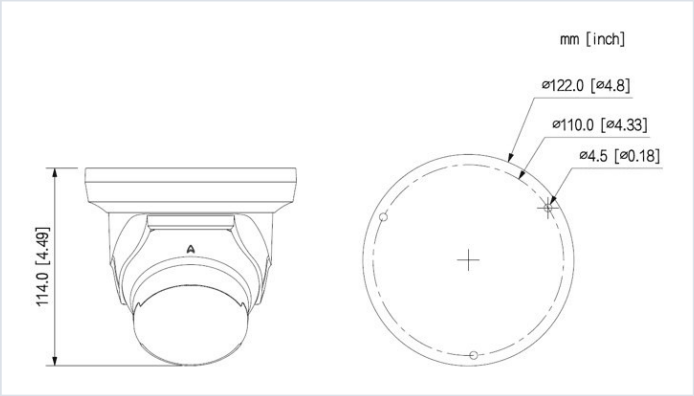

CERTIFICATIONS AND COMPLIANCE

Certifications	FCC, IC
Compliance	NDAA

Compatible Mounts

The mounts below are compatible with this camera and are sold separately. Where two SKUs are listed for the same mount type, choose either one. Click any SKU to see photos and details on huntcctv.com, or contact us at (888) 993-4868 or info@huntcctv.com if you are not sure which mount fits your installation.

MOUNT TYPE	SKU	DESCRIPTION
Electrical Box	HTH-280NJ-J02RB ↗	Black Electrical Box (120mm)
	HTH-280NJ-CJ11B ↗	Black Electrical Box (145mm)
Wall Mount	HTH-272NJ-120B ↗	Wall Mount Bracket (120mm)
	HTH-262NJ-W01 ↗	Wall Mount Bracket (120mm)
Pendant Mount (1 ft)	HTH-271NJ-120 ↗	Pendant Mount, 1 ft (120mm)
Telescope Mount (2–4 ft)	HTH-271NJ-120-24 ↗	Telescope Mount, 2–4 ft (120mm)
Telescope Mount (3–6 ft)	HTH-271NJ-120-36 ↗	Telescope Mount, 3–6 ft (120mm)